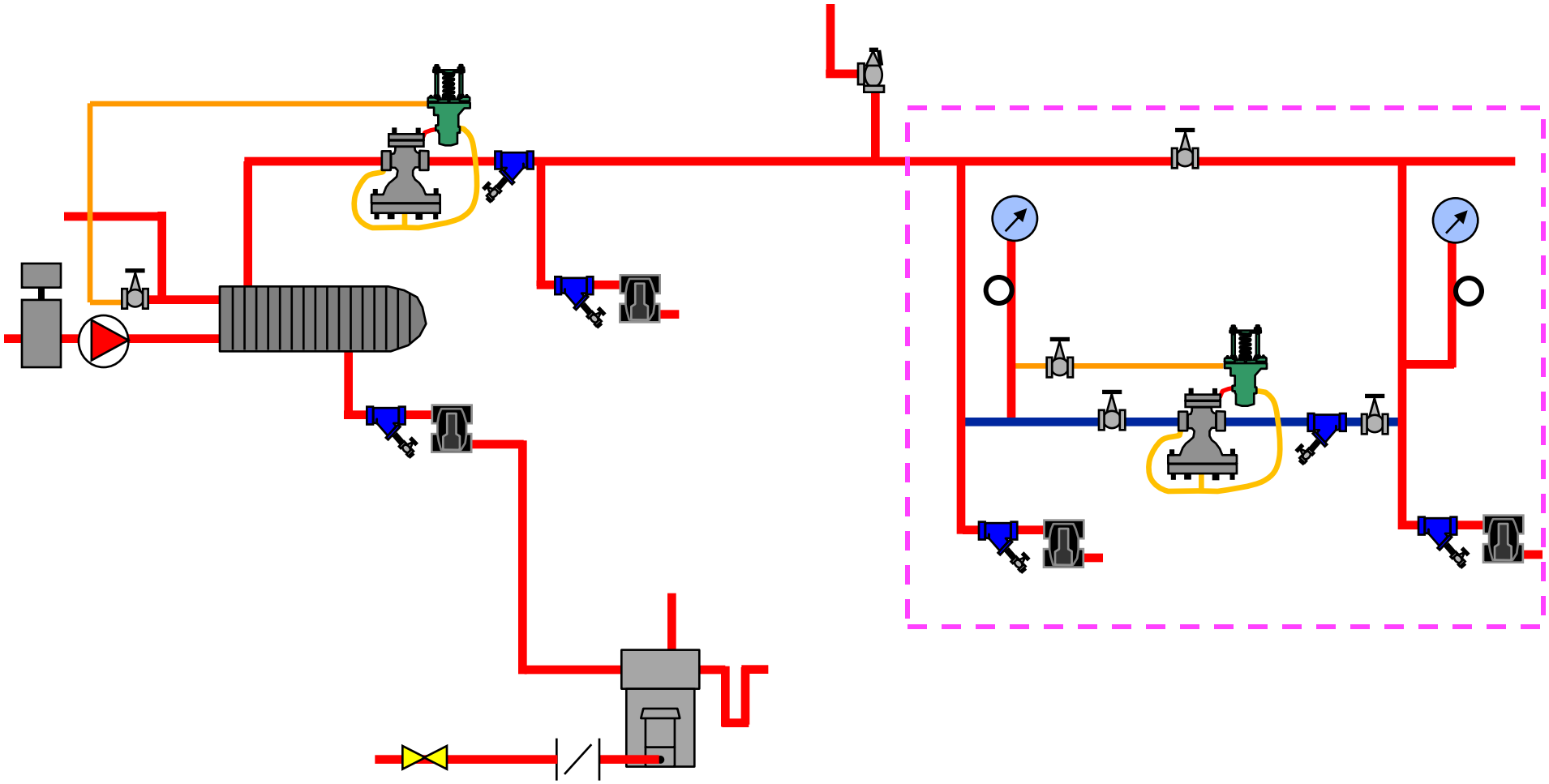Pressure Reducing Station